正式图	参考图	CUSTOMER DRAWING
		ROHS2 / Halogen free

Mark	ECN NO.	DESCRIPTION	DESIGN	Date:
——	——	NEW VERSION	Zeng Yu	2013-12-30

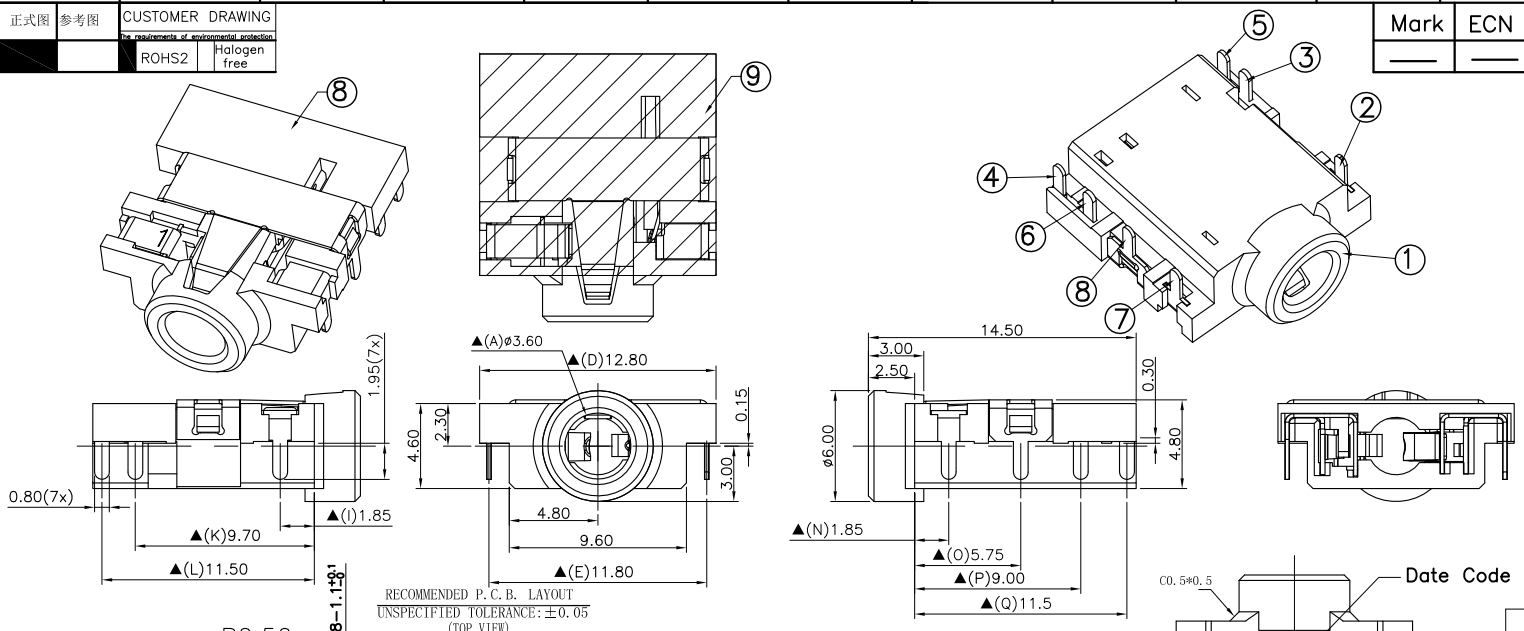

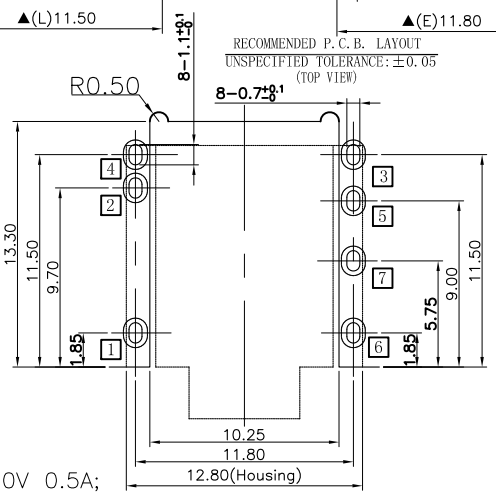

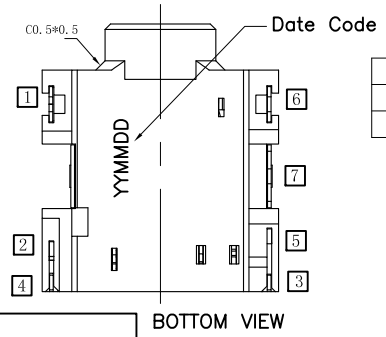

NO.	CODE	MATERIAL	REMARK
2	L3	PA10T,30%G/F UL 94V-0	RoHS2&H.F Fit
1	L0	PA9T,30%G/F UL 94V-0	RoHS2 Fit

TABLE B : Plastical Material

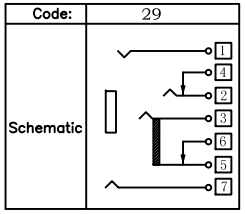

TABLE A: Schematic And Code

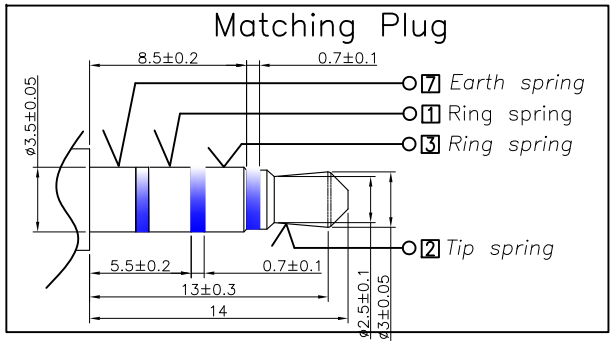

P/N: C33004W-XXXX-XXXXXXX

- Model P/N
- Plastical Material (Choose From Table B)
- Housing Color 01:Black
- Schematic Code (See Table A)
- Product salt mist A:Normal;
- Plating: 0:Bright Tin; W:MATTE Tin; 1:Ni:20u"+Au:Gold flash;
- Remark 00:Normal
- Packing R:Tape reel.

NOTES:
1. Rating:DC30V 0.5A;
2. Contact Resistance:≤30Milliohm,After Test:≤50Milliohm;
3. Insulation Resistance:≥100Megohm(DC500V);
4. Withstand Voltage:AC500V for 1Minute;
5. Insertion and Extraction force:3~30N;
6. Life test:5000 Cycles.
7. Operating Temperature:-20°C~+70°C 85%RH Max;
8. Storage Temperature:-40°C~+85°C 85%RH Max.

NO.	DESCRIPTION		QTY	PARTS MATERIAL	PLATING OR COLOR	REMARK
⑧	Mylar		1	——	——	——
⑧	Earth spring	7	1	Copper Alloy	CHOOSE FROM P/N PLATING CODE	——
⑦	Make spring	6	1	Copper Alloy	CHOOSE FROM P/N PLATING CODE	——
⑥	Transfer terminal	5	1	Copper Alloy	CHOOSE FROM P/N PLATING CODE	——
⑤	Shunt terminal	4	1	Copper Alloy	CHOOSE FROM P/N PLATING CODE	——
④	Ring spring	3	1	Copper Alloy	CHOOSE FROM P/N PLATING CODE	——
③	Tip spring	2	1	Copper Alloy	CHOOSE FROM P/N PLATING CODE	——
②	Ring spring	1	1	Copper Alloy	CHOOSE FROM P/N PLATING CODE	——
①	Housing		1	CHOOSE FROM TABLE B	CHOOSE FROM P/N HOUSING COLOR	——

Tolerance			
X.X	±0.30	MODEL NAME:3.5PHONE JACK	DRAWING: Miao Xue Ting
X.XX	±0.20	MODEL No:C33004W-XX01-29AX00R	CHECKED: Zeng Yu
X.XXX	±0.10	SCALE:1:1 / REVISION A0 / SHEET 1/1	APPROVED: Xiao ZhongBo
Angle	±3.0°		DATE: 2013-12-30
UNIT:mm		菱揚精密有限公司 Ling Yang Precision Co.,Ltd	FILE: XZB/LINGYANG
			DWG NO. C33004W-A001